DIAMONDBACK®

Owner's Manual

1000 Series
Assembly Instructions

Your Diamondback HRT fitness equipment with its unique Heart Rate Control function offers the solution to the problem of accurately measuring exercise heart rate.

The Diamondback "break-through" in training technology will accurately assist you in reaching specific fitness goals, whether they be improved basic conditioning, increased anaerobic threshold, or weight loss.

By taking the guesswork out of exercise, you will be able to maximize fitness results with a minimal investment of time. Maintaining or improving your fitness (especially your cardiovascular system) by exact measurement and control over the activity of the heart will add years to your life.

The Diamondback HRT fitness equipment starts you on the path to good health and fitness today.

Good luck and best of health.

Diamondback 1000 series
Edmund R. Burke, Ph.D.

The Diamondback 1000 Series exercise equipment applies the most up-to-date microprocessor electronics and accurate heart rate monitoring and controlling technology in the fitness industry. The HRT (Heart Rate Trainer) monitors or controls your pulse or heart rate, thus tailoring physical exercise to your present state of fitness and personal capabilities. Your pulse or heart rate tells you how fast your heart is beating, showing you by its behavior during exercise how fit you are, what kind of shape you are in our how hard you are working.

The 1000U (upright cycle) and 1000R (recumbent cycle) have an earlobe pulse sensor for monitoring or controlling the pulse rate during exercise. The detection device uses the principle of photo-reflectance. When placed on the earlobe, a photocell is used and a light source measures the pulse rate.

As an option on the 1000U and 1000R, and as standard equipment on the 1000ES (stepper), we've incorporated the most accurate and reliable telemetry heart rate system that allows for exact measurements and control over your heart rate activity. Heart rate control is provided by the unique magnetic braking system's computer and by Polar™, the world leader in wireless heart rate monitoring. Polar™ Heart Rate systems are used by many athletes, coaches and doctors in numerous sports.

The 1000 series HRT allows you to exercise in three heart rate control modes. You can exercise at 60% or 85% of your maximum heart rate (Guidelines established by the American College of Sports Medicine) or you can enter a set target heart rate and the 1000 series HRT will automatically adjust the resistance (load) to maintain your heart rate at any specific level of cardiovascular training.

You will find the 1000 series HRT to be very user friendly. The "quick start" manual program begins with no preprogramming needed and the hill profiles feature an auto-engage function that allows you to set your course and begin training instantly. Low RPM/low wattage start-up is perfect for deconditioned users, while high resistance is offered for advanced athletes.

Additional special features of the Diamondback 1000 series HRT include a pause mode after 5 minutes of "non" use and an upper heart rate limit safety shut-off system which prevents riders from overtraining when wearing heart rate chest or ear clip monitor. All 1000 series steppers and exercise cycles will give you a read-out of total distance traveled during training.

The Diamondback 1000 series Heart Rate Trainer is the total performance monitoring and exercise tool for the serious exercise enthusiast.

TABLE OF CONTENTS

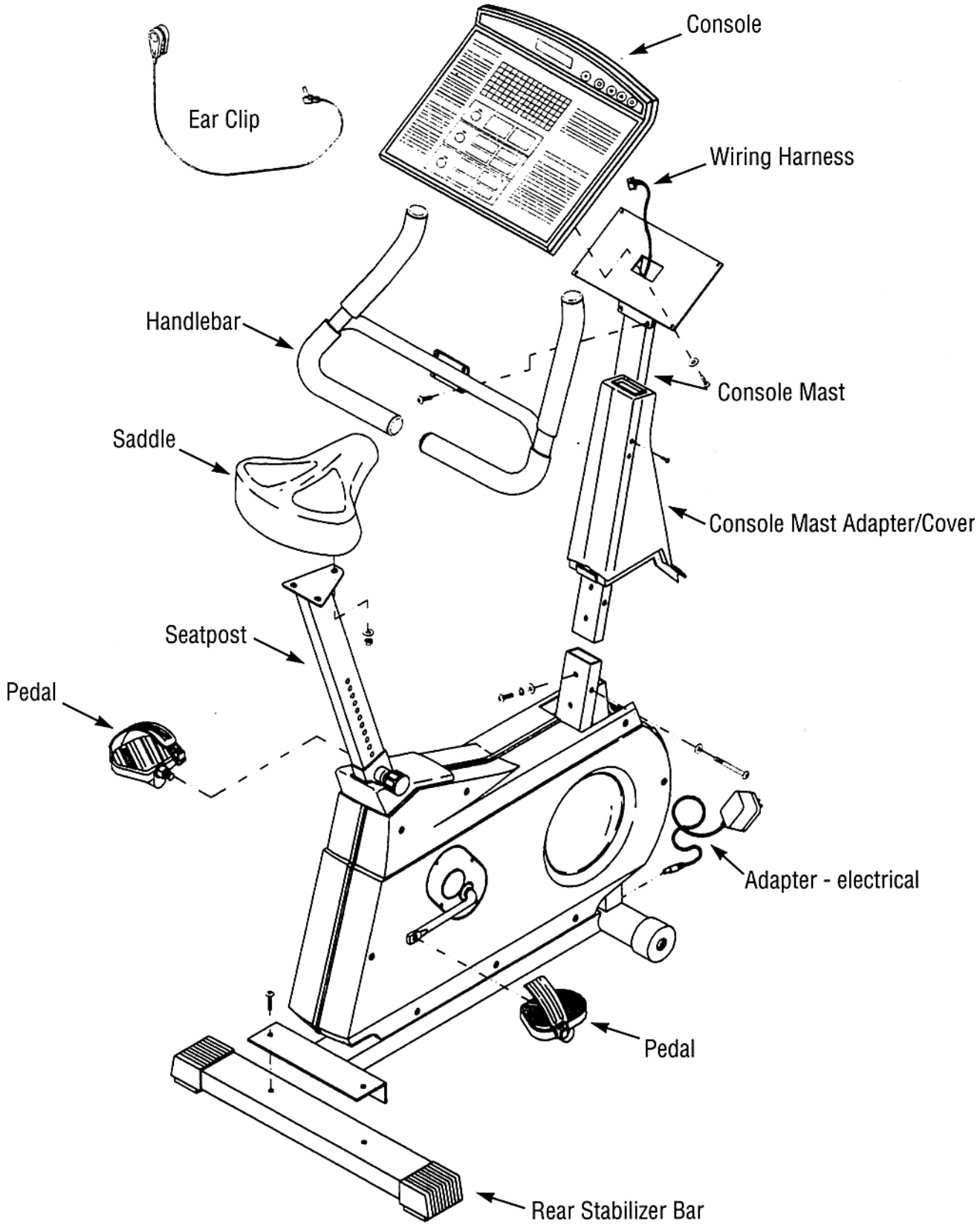
Console
Ear Clip
Wiring Harness
Handlebar
Console Mast
Saddle
Console Mast Adapter/Cover
Seatpost
Pedal
Adapter - electrical
Pedal
Rear Stabilizer Bar

IMPORTANT NOTE : LUBRICATE ALL SCREW THREADS PRIOR TO INSTALLATION.

A. FRAME ASSEMBLY

1. Place rear stabilizer bar under rear main frame body & align screw holes.
2. Insert and tighten the two M8 x 20mm screws using a 5mm Allen wrench.
3. Install seatpost by sliding it into seatpost receptor.

B. CONSOLE MAST ASSEMBLY

1. Install console mast adapter/cover onto console mast. Insert grommet into slot on lower front portion of console mast.
2. Insert the wiring harness into the slot on the lower front portion of the console mast and pull through the top (pull until just tight, DO NOT PULL HARD!!) WIRING HARNESS INSTALLATION HINT: Straighten the loops of the wiring harness so that it can slide smoothly into the console mast. Hold the bottom of the console mast next to the console mast receptor and point the top of the console mast downward.
3. Install the console mast by sliding it into the console mast receptor. Insert and tighten the M8 x 70mm and two M8 x 40mm screws and washers using a 5mm Allen wrench.
4. Snap console mast adapter/cover into top of sidecase.

C. HANDLEBAR

1. Assemble the handlebar onto the mount and insert and tighten the four M8 x 13mm bolts using a 6mm Allen wrench.

D. CONSOLE ASSEMBLY

1. Connect the plug from the wiring harness to the plug receptor on the backside of the console taking care to install correctly (see plug alignment marks). WIRING HARNESS INSTALLATION HINT: Any excess wiring must be carefully inserted ("stored") back into the console mast before installing the console onto the console mast.
2. Fasten the console to the console mast with the four M5 x 12mm screws and washers using a Phillips screwdriver.

E. SADDLE ASSEMBLY

1. Assemble saddle onto seatpost.
2. Install and tighten the three M8 affixing nuts and six washers using 1/2" end wrench. SADDLE ANGLE ADJUSTMENT HINT: Place washers above or below saddle mounting plate, as necessary, to raise or lower front or rear of saddle for optimum comfort.

F. PEDALS

1. Use a 15mm open end wrench to firmly affix the pedals to the cranks.
2. The left and right pedals are different and are denoted as right or left on the bottom of each pedal. NOTE : Left pedal threads counter-clockwise.

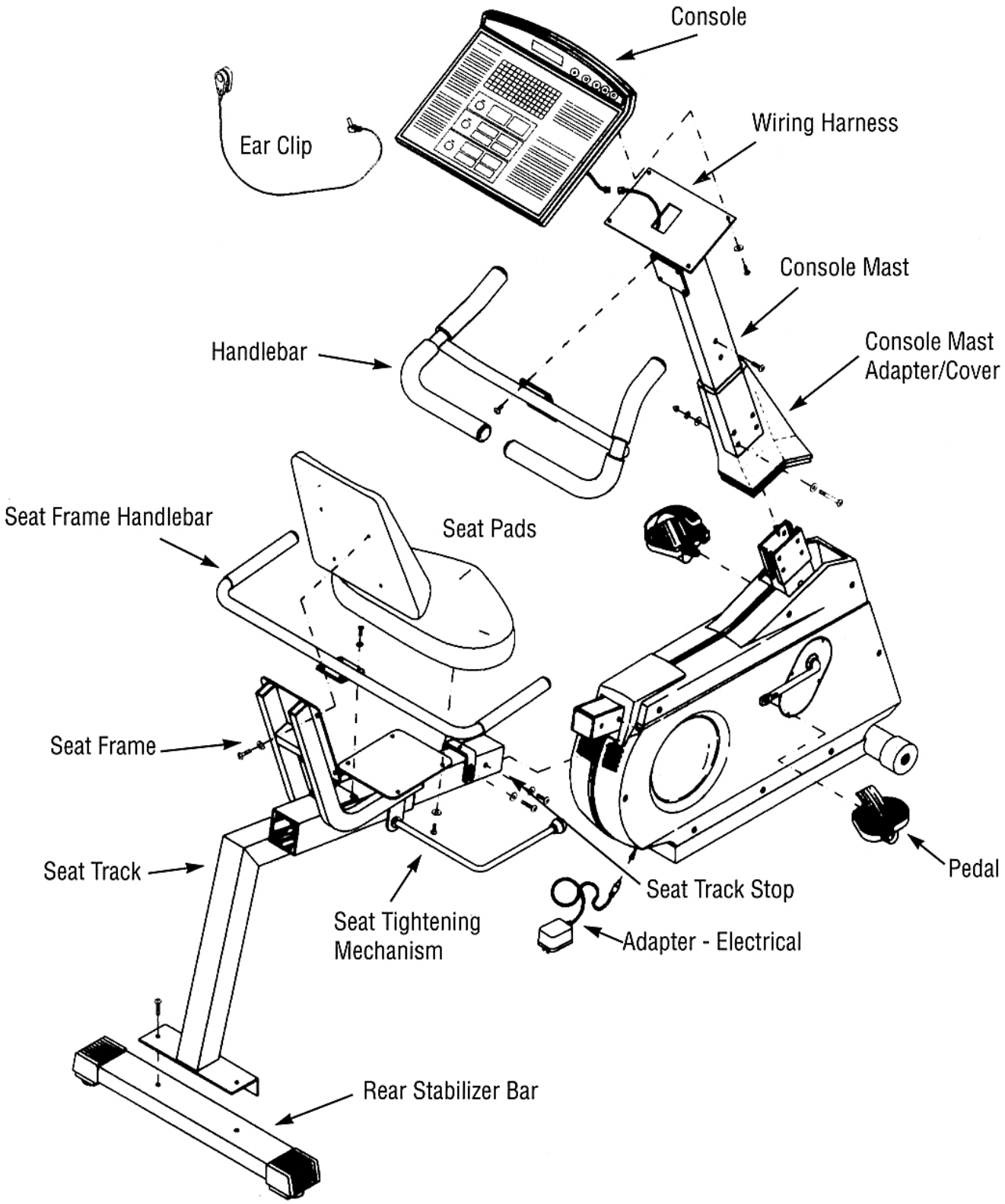
Console
Ear Clip
Wiring Harness
Console Mast
Handlebar
Console Mast
Adapter/Cover
Seat Frame Handlebar
Seat Pads
Seat Frame
Seat Track
Seat Tightening
Mechanism
Seat Track Stop
Adapter - Electrical
Pedal
Rear Stabilizer Bar

IMPORTANT NOTE : LUBRICATE ALL SCREW THREADS PRIOR TO INSTALLATION.

A. REAR FRAME & SEAT ASSEMBLIES

1. Place rear stabilizer bar under the seat track and align the screw holes.
2. Insert and tighten two M8 x 20mm screws using a 5mm Allen wrench.
3. Assemble seat frame to seat track, making sure to adjust the seat tightening mechanism so it will not bind with the seat track upon installation.
4. Install seat track assembly by sliding seat track onto seat track receptor. Securely fasten the seat track using two M8 x 15mm screws and the seat track stop using two M8 x 20mm screws with a 5mm Allen wrench. Take note that the seat track stop must be installed on the screws farthest from the seat frame (See Diagram).
5. Install the seat frame handlebar onto the seat frame using four M8 x 15mm screws with a 5mm Allen wrench.
6. Install Seat pads onto the seat frame using four 1/4-20 x 1/2" screws (for each pad).

B. CONSOLE MAST ASSEMBLY

1. Install console mast adapter/cover onto console mast.
2. Insert the wiring harness into the bottom of the console mast and pull through the top (pull until just tight, DO NOT PULL HARD!!) WIRING HARNESS INSTALLATION HINT: Straighten the loops of the wiring harness so that it can be slid smoothly into the console mast. Hold the bottom of the console mast next to the console mast receptor and point the top of the console mast downward. Make sure that the handlebar bolts are backed out completely so they do not interfere with the wiring harness.
3. Install the console mast by sliding it onto the console mast receptor. Insert and finger tighten all four of the M8 x 60mm Allen screws, washers and nuts. After all four of the console mast screws have been finger tightened, securely tighten all of the console mast screws using a 6mm Allen wrench.
4. Snap console mast adapter/cover into top of sidecase.

C. HANDLEBAR

1. Assemble the handlebar onto the mount and insert and tighten the four M8 x 13mm bolts using a 6mm Allen wrench.

D. CONSOLE ASSEMBLY

1. Connect the plug from the wiring harness to the plug receptor on the backside of the console taking care to install correctly (see plug alignment marks). WIRING HARNESS INSTALLATION HINT: Any excess wiring must be carefully inserted ("stored") back into the console mast before installing the console onto the console mast.
2. Fasten the console to the console mast the four M5 x 12mm screws and washers using a Phillips screwdriver.

F. PEDALS

1. Use a 15mm open end wrench to firmly affix the pedals to the cranks.
2. The left and right pedals are different and are denoted as right or left on the bottom of each pedal. NOTE : Left pedal threads counter-clockwise.

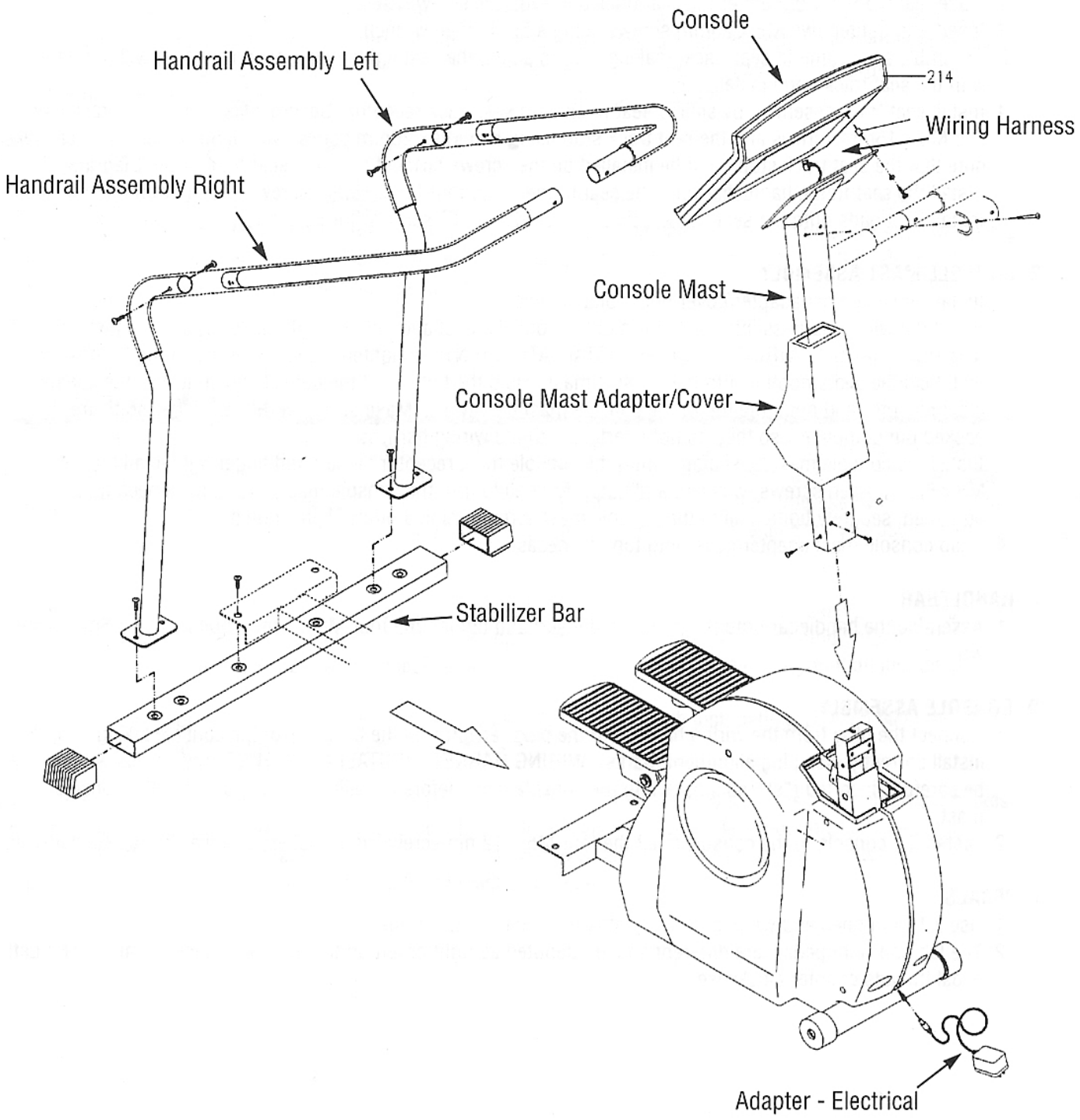
Console
Handrail Assembly Left
214
Wiring Harness
Handrail Assembly Right
Console Mast
Console Mast Adapter/Cover
Stabilizer Bar
Adapter - Electrical

IMPORTANT NOTE : LUBRICATE ALL SCREW THREADS PRIOR TO INSTALLATION.

A. FRAME ASSEMBLY

1. Place rear stabilizer bar under main frame body & align screw holes.
2. Insert and tighten the two M8 x 20mm screws with a 5mm Allen wrench.

B. CONSOLE MAST ASSEMBLY

1. Install console mast adapter/cover onto console mast.
2. Insert the wiring harness into the bottom of the console mast and pull through the top (pull until just tight, DO NOT PULL HARD!!) WIRING HARNESS INSTALLATION HINT: Straighten the loops of the wiring harness so that it can be slid smoothly into the console mast. Hold the bottom of the console mast next to the console mast receptor and point the top of the console mast downward. Make sure that the handrail bolts are backed out completely so they do not interfere with the wiring harness.
3. Install the console mast by sliding it onto the console mast receptor. Insert and tighten the four M8 x 15mm screws and washers with a 5mm Allen wrench.
4. Snap console mast adapter/cover into top of sidecase.

C. HANDRAIL ASSEMBLY

1. Assemble the upper and lower sections of the right and left handrails using two M8 x 15mm screws each using a 5mm Allen wrench.
2. Place the left and right handrail assemblies into position : assemble the handrail clamp cover and handrails onto the upper portion of the console mast. Insert and finger tighten the two M8 x 55mm Allen screws. Align screw holes on bottom of handrails and top of stabilizer bar. Insert and tighten two M8 x 20mm screws into each handrail and tighten with a 6mm Allen wrench. Tighten clamp cover screws on upper portion of console mast with a 6mm Allen wrench.

D. CONSOLE ASSEMBLY

1. Connect the plug from the console to the plug receptor on the backside of the console taking care to install correctly (see plug alignment marks). WIRING HARNESS INSTALLATION HINT: Any excess wiring must be carefully inserted ("stored") back into the console mast before installing the console onto the console mast.
2. Fasten the console to the console mast the four M5 x 12mm screws and washers using a Phillips screwdriver.

IMPORTANT SAFETY INSTRUCTIONS

The 1000 series equipment is built for optimum safety. However, certain precautions need to be followed when operating a piece of exercise equipment. Be sure to read the entire manual before operating your 1000U, 1000R or 1000ES. In particular, note the following safety procedures.

DANGER - *DO NOT OPERATE THE HEART RATE MONITOR TRANSMITTER TOGETHER WITH AN ELECTRICAL HEART PACEMAKER. THE TRANSMITTER MAY CAUSE ELECTRICAL DISTURBANCES.*

CAUTION - *FOR SAFE OPERATION:*

1. Before beginning any exercise program on the 1000 series equipment, it is important to consult with your physician if you have any of the following: history of heart disease, high blood pressure, diabetes, chronic respiratory diseases, elevated cholesterol, or if you smoke cigarettes or experience any other chronic diseases or physical complaints.

2. If over the age of 35 or overweight, consult with your physician before beginning an exercise program.

3. Pregnant women should consult with their physician before beginning an exercise program.

4. If you experience dizziness, nausea, chest pains or other abnormal symptoms during exercise, stop the exercise session immediately. Consult a physician before continuing.

WARNING - *TO REDUCE RISK OF INJURY TO YOURSELF OR OTHERS:*

1. To ensure proper functioning of your 1000 series equipment, do not install attachments or accessories not provided or recommended by Diamondback.

2. Keep children away from 1000 series equipment. Hands and feet may get caught in the pedals or other moving parts which could result in serious injury. Keep your hands and feet away from all moving parts.

3. Keep 1000 series equipment away from walls to allow proper ventilation. Air should be able to circulate freely around the units. Keep all air openings free of dirt and dust. Never insert anything into openings.

4. The 1000 series equipment is intended for indoor use in the home or light commercial establishment. It is not intended for outdoor use.

5. Drink fluids if you exercise for over twenty minutes on the 1000U, 1000R or 1000ES.

6. Place your 1000 series unit on a solid, level surface when in use.

7. Use the handlebars or handrails when getting on and off your 1000 series unit.

8. Never operate the unit if it is damaged or broken. Contact your local authorized Diamondback fitness dealer for service.

9. Do not operate if oxygen equipment is being used by the individual using the 1000 series equipment or if aerosol (spray) products are being used in the area.

10. Always wear proper clothing and shoes when exercising on the 1000U, 1000R or 1000ES.

11. Always make sure all components are fastened securely. (Example: seat post, saddle, handlebars.)

12. SAVE THIS OPERATING INSTRUCTIONS MANUAL.

1000U / 1000R

Proper adjustment of seat position and knowledge of pedaling cadence will allow effective use of your leg muscles without producing undue muscular fatigue. Applying these proper techniques will allow you to ride comfortably and efficiently. These biomechanically designed stationary cycles are fully adjustable to optimize comfort.

1. Leg Extension : The seat should be positioned such that the leg is almost fully extended when the ball of the foot is on the pedal and the pedal is in the position furthest from the body. This will allow for greater use of more leg muscles, thereby maximizing cardiovascular benefit while minimizing fatigue.

2. Foot Position: The ball of the foot should be on the pedal, directly over the pedal axle. This position allows you to maximize the action of your calf muscles. Avoid pedaling with the arch of your foot on the pedal. If toe clips and straps are attached to the pedals, use them to help stabilize your foot on the pedals; but, do not use them if they place your foot in an unnatural position.

1000ES

The 1000ES is designed for optimum use by adults of any height and weight. The maximum step height is 16" with the effective user range between 6" and 16". Generally, longer steps will allow for greater use of more leg muscles, thereby maximizing cardiovascular benefit while minimizing fatigue.

GENERAL 1000 SERIES TIPS

1. Earlobe Monitor (standard equipment on 1000U and 1000R): Your pulse can be taken by means of an earlobe sensor that is connected by the cord to the terminal on the control panel. Place the ear clip on your earlobe. To promote better circulation, rub your earlobes before placing ear clip on the earlobe. Use the restraint clip on clothing to reduce excessive cable movement. NOTE : Re-position ear clip on the earlobe as necessary to maximize signal pick-up.

2. POLAR™ Belt : Wrap the transmitter strap around your chest. Adjust the strap so that it covers the lower ribs and tight enough so that it will not slide while exercising. Moisten the electrode inner strip of the strap with water. Holding the transmitter facing forward, position the center of the transmitter over your chest. The belt may be worn on the outside of clothing as long as the clothing is property moistened under the area of the electrode strip.

   Review Section: Polar™ ECG Wireless Heart Rate Monitor/Control (page 12).

3. Cadence : There is a strong relationship between cadence (revolutions <RPMs> / steps <SPMs>) and the efficiency of your workouts. Research indicates that you will be more comfortable and get a lot more work done if you maintain a cadence of at least 60 RPMs or SPMs. The 1000 series console will give you a continuous readout of your cadence.

4. Dress and Comfort: While exercising on your 1000 series HRT equipment, you will find that you may sweat more than you do while exercising outdoors, because you do not have the wind blowing across your body to cool you off and aid in evaporation. Do not over dress; exercise in a well ventilated area; you may feel more comfortable with a fan blowing air across your body. Make sure to drink fluids to offset dehydration and protect against overheating. All 1000 series units are equipped with bicycle water bottle mounts for the convenient addition of a watter bottle and cage (optional).

POLAR™ ECG WIRELESS
(Optional on 1000U and 1000R Bicycles)

There are three parts to the Polar™ Heart Rate System on the Diamondback 1000 series HRT.

1. The Sensor/Transmitter
2. The Chest Band
3. The Console

Take a moment now to examine each of these components carefully, noting the features highlighted in the diagrams below.

PRECAUTION

Erratic heart rate reception may occur if the HRT series (used in conjunction with the Polar heart rate monitoring system) is in close proximity to strong sources of electromagnetic radiation such as TV sets, PCs, electric motors, and other fitness equipment.

Only one transmitter should be used inside the range of any one receiver as the receiver may pick up several signals simultaneously causing an incorrect readout.

THE MINIMUM DISTANCE BETWEEN TWO TRANSMITTERS AND OTHER RADIATION SOURCES SHOULD BE 3-1/2 FEET.

1. Sensor/Transmitter
   A- Chest strap connecting points
   B- Casing for transmitter electronics and battery

2. Chest Band/Strap
   C- Snap in Belt lock
   D- Lock system for adjusting the belt length

3. The Console (See pages 13 and 17)

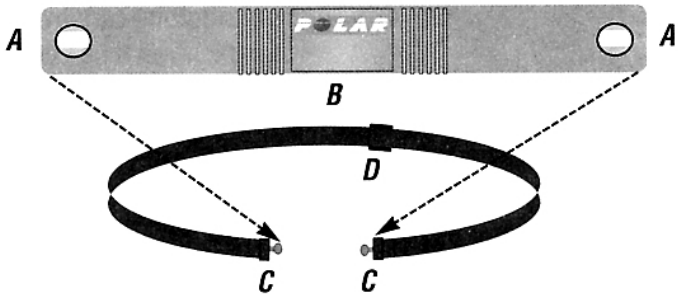

The receiver of the wireless ECG system is built into the console unit of the Diamondback 1000ES and plugs into the front of the console (optional) on the Diamondback 1000U and 1000R. While using heart rate control modes, the computer monitors the exact measurement of and control over the activity of the heart. Heart rate frequency is displayed while the computer continually compares heart rate and adjusts wattage (load) to maintain heart rate to the preprogrammed personal data.

How to Wear Your Sensor/Transmitter

1. Snap one end of the chest strap onto the transmitter.
2. Adjust the band length so that the fit is snug, but not too tight.
3. Snap the other end of the chest strap onto the transmitter.
4. Center the transmitter on your chest below the pectoral muscle (breasts) as shown.
5. Pull unit away from chest by stretching belt and moisten the conductive electrode strips located underneath the snaps. If you wish to wear the band over a shirt, moisten the shirt under area of the electrode strip.

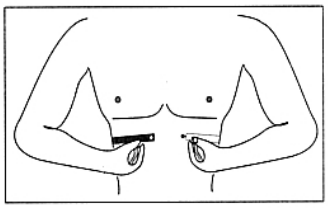

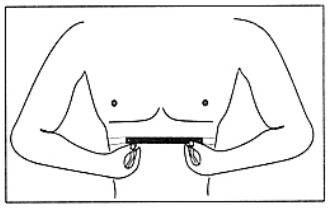

Note: *The transmitter is on automatically when you're wearing it. It is off when it's not connected to your body. However, as moisture may activate the transmitter, please dry transmitter after use.*

You will have to be within three and a half feet of the receiver in the control panel/console to pick up the heart rate signal. Please note that your transmitter may fluctuate erratically if you are too close to other Polar™ equipment. Maintain a distance of three and a half feet from other Polar™ units.

The chest band is washable. After you have detached the transmitter, wash the band in warm water, using a mild soap, and rinse in clear water. Never scrub the transmitter surfaces.

The transmitter uses an extended life non-replaceable battery. If you need new transmitters, contact an authorized Diamondback fitness dealer or Polar™ USA (99 Seaview Blvd., Port Washington, N.Y. 11050. (800) 227-1314).

Shorter belts for smaller people, and extra belts are available if required. Contact an authorized Diamondback fitness dealer or Polar™ USA (99 Seaview Blvd., Port Washington, N.Y. 11050. (800) 227-1314) for additional belts.

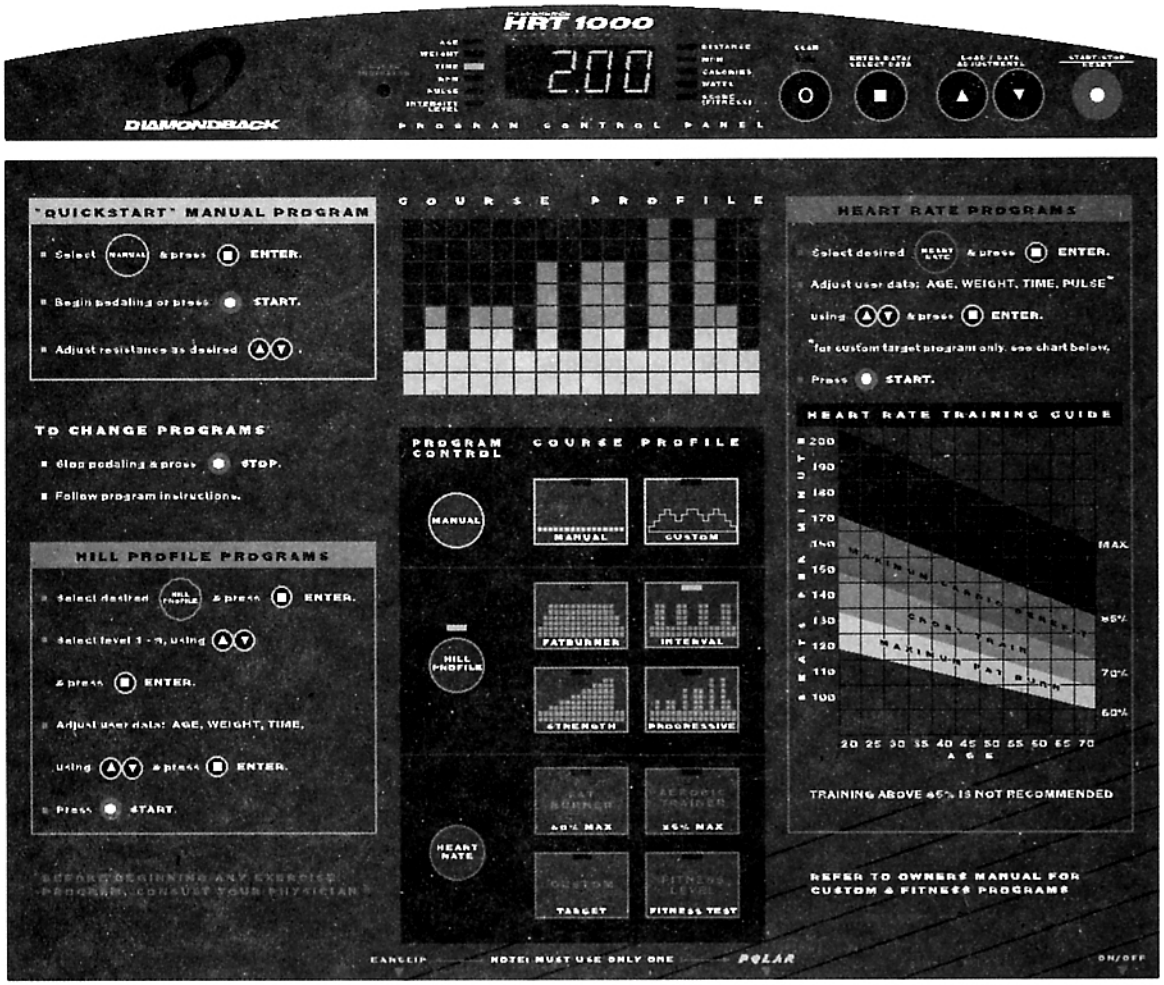

NOTE: When using optional Polar™ heart rate belt and plug-in receiver, position the Polar™ receiver horizontally (as shown) for best signal pick-up.

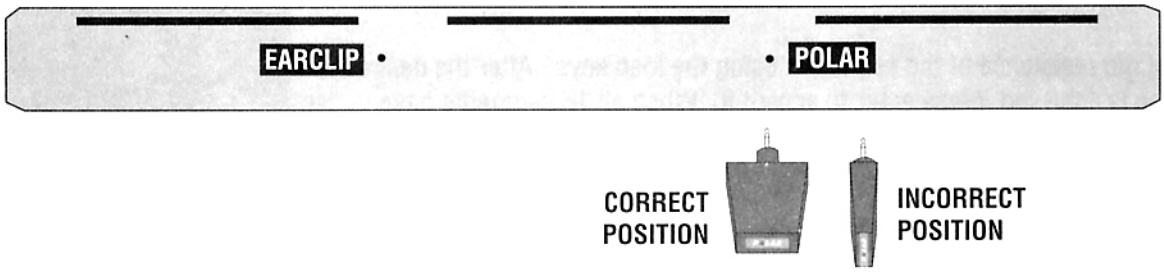

NOTE: The console shown above is in fact a computer module. As with any computer, it is advisable to provide a power surge protection device at the outlet. The computer may also have difficulty in operations if a consistent level of correct input voltage is not maintained.

Auto Pause Mode

The 1000 series equipment has a convenient auto pause mode. If no RPMs are recorded for a period of 25 seconds, the timer will stop counting. All data will be retained and you can start where you left off simply by resuming your workout.

Manual Program - Manual Course

In manual mode, you set the desired time of exercise in minutes. If possible, exercise for a minimum of 20 to 30 minutes, including a warm-up and cool-down. Do not set the resistance so high that you have a hard time maintaining a minimum of 60 to 70 pedal revolutions for the exercise session.

Most individuals prefer to exercise for a specific period of time at a set workload. However, the manual mode also allows you to switch back and forth between periods of higher and lower workloads, which is often referred to as interval training. Interval training is used by athletes to develop power and strength. For example, you may wish to work at a high intensity for 30 seconds followed by 60 seconds at a lower intensity, allowing for recovery. Repeat this several times during the exercise session. As your fitness level progresses, you can add more work and relief intervals and vary the length of the work and recovery periods.

1. If heart rate monitoring is desired, make sure the earlobe sensor or optional Polar™ heart rate belt and external plug-in receiver is in position and inserted into the correct input jack on the bottom of the console.

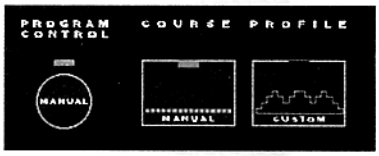

2. Upon initial powering of the 1000U/R, the console will automatically be in the "manual" program and "manual" mode. If not in manual program select "manual" program by pressing the manual program key until the manual course LED is lighted. For quickstart operation, begin pedaling and time will begin to be accrued. No keys need to be pressed and no data needs to be entered when in the quickstart manual program.

If all or part of the user mode (age, weight, time) is desired, then use the following instructions:
A. If not in the manual program, select "manual" program by pressing the manual program key until the manual course LED is lighted. Press enter to accept this program.
B. Adjust user data as desired and press enter after each adjustment.
C. Press start or begin pedaling when ready to start.
The timer will count down and beep when the program time reaches zero. Also, the program will repeat as necessary if the user wishes to continue his or her workout.

Manual Program - Custom Hill Profile

1. Select "manual" program by pressing the manual program key until the custom course LED is lighted. Press enter to accept the custom course.

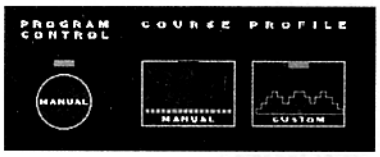

2. Adjust the resistance of the segments using the load keys. After the desired resistance is achieved, press enter to accept it. When all 16 segments have been adjusted and entered (accepted), the program will automatically move to the other user data modes.

3. Adjust user data as desired and press enter after each adjustment. NOTE: A level of difficulty must be chosen for the custom hill workout based on the chart given at right:

4. Press start or begin pedaling when ready to start. The timer will count down and beep when the program time reaches zero. The program will repeat as necessary if the user wishes to continue his or her workout.

USER INTENSITY CHART

LEVEL	WATTAGE RANGE @ 60 RPM	
1	35 WATTS – 115 WATTS	
2	40 WATTS – 115 WATTS	BEGINNER
3	49 WATTS – 130 WATTS	
4	60 WATTS – 150 WATTS	
5	70 WATTS – 172 WATTS	ADVANCED
6	80 WATTS – 194 WATTS	
7	90 WATTS – 222 WATTS	
8	100 WATTS – 251 WATTS	EXPERT
9	115 WATTS – 280 WATTS	

Hill Profile Program - All Courses

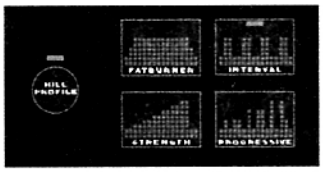

1. Select "hill profile" program of choice by pressing the hill profile program key until the desired course LED is lighted. Press enter to accept this course.

2. Adjust user data as desired and press enter after each adjustment. NOTE : A level of difficulty must be chosen for the hill profile workout based on the chart given at right:

3. Press start or begin pedaling when ready to start. The timer will count down and beep when the program time reaches zero. The program will repeat as necessary if the user wishes to continue his or her workout.

Heart Rate Programs - 60% Fatburner and 85% Aerobic Trainer

1. Heart Rate monitoring is mandatory with all Heart Rate programs. Make sure the earlobe sensor or Polar™ heart rate belt and external plug-in receiver is in position and inserted into the correct input jack on the bottom of the console.

2. Select "heart rate" program of choice by pressing the heart rate program key until the desired course LED is lighted. Press enter to accept this course.

3. Adjust user data as desired and press enter after each adjustment.

4. Press start to begin the program.

Heart Rate Programs - Target Training

1. Heart rate monitoring is mandatory with all Heart Rate programs. Make sure the earlobe sensor or Polar™ heart rate belt and external plug-in receiver is in position and inserted into the correct input jack on the bottom of the console.

2. Select "heart rate" program of choice by pressing the heart rate program key until the desired course LED is lighted. Press enter to accept this course.

3. Adjust the user data (target heart rate and time) and press enter after each adjustment.

4. Press start to begin the program.

NOTE: When using any of the above heart rate programs the system will automatically shut down if your heart rate exceeds the target by 25%.

Heart Rate Programs - Fitness Test

1. Heart rate monitoring is mandatory with all Heart Rate programs. Make sure the earlobe sensor or Polar™ heart rate belt and external plug-in receiver is in position and inserted into the correct input jack on the bottom of the console.

2. Select "heart rate" program of choice by pressing the heart rate program key until the desired course LED is lighted. Press enter to accept this course.

3. Adjust user data (age, weight, and fitness level A, B or C) and press enter after each adjustment. NOTE : Level A is for light to moderately conditioned users; level B is for moderate to well conditioned users and level C is for extremely well conditioned users. The Fitness Test should be performed while pedaling between 50 and 60 RPMs.

4. Press start to begin the program.

5. The Fitness Test will end when your heart rate reaches 65% of your maximum heart rate or after 8 minutes of exercise. A fitness score will appear between 1 and 10, with 10 indicating the highest level of fitness.

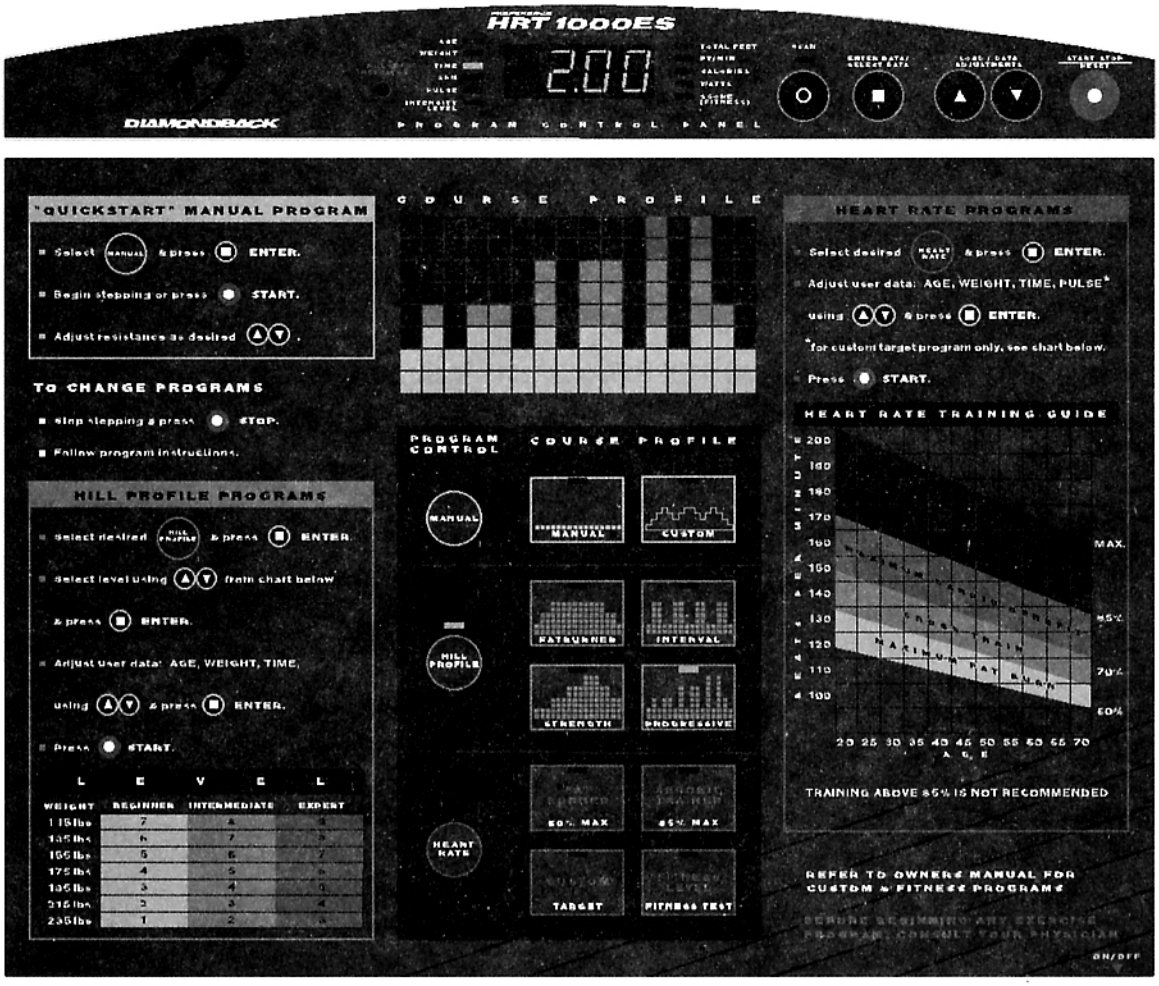

IMPORTANT NOTE: AFTER TURNING POWER ON, WAIT 15 SECONDS BEFORE STEPPING

NOTE: The console shown above is in fact a computer module. As with any computer, it is advisable to provide a power surge protection device at the outlet. The computer may also have difficulty in operations if a consistent level of correct input voltage is not maintained.

Auto Pause Mode

The 1000 series equipment has a convenient auto pause mode. If no steps per minute (SPMs) are recorded for a period of 25 seconds, the timer will stop counting. All data will be retained and you can start where you left off simply by resuming your workout.

IMPORTANT NOTE: AFTER TURNING THE POWER ON, WAIT 15 SECONDS BEFORE STEPPING

Manual Program - Manual Course

In manual mode, you set the desired time of exercise in minutes. If possible, exercise for a minimum of 20 to 30 minutes, including a warm-up and cool-down. Do not set the resistance so low that you have a hard time maintaining a minimum of 40 to 50 steps per minute for the exercise session..

Most individuals prefer to exercise for a specific period of time at a set workload. However, the manual mode also allows you to switch back and forth between periods of higher and lower workloads, which is often referred to as interval training. Interval training is used by athletes to develop power and strength. For example, you may wish to work at a high intensity for 30 seconds followed by 60 seconds at a lower intensity, allowing for recovery. Repeat this several times during the exercise session. As your fitness level progresses, you can add more work and relief intervals and vary the length of the work and recovery periods.

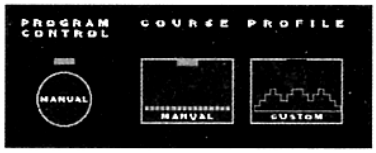

1. If heart rate monitoring is desired, make sure the Polar™ heart rate belt is securely fastened around the chest.

2. Upon initial powering of the 1000ES, the console will automatically be in the "manual" program and "manual" mode. If not in manual program select "manual" program by pressing the manual program key until the manual course LED is lighted. For quickstart operation, begin pedaling and time will begin to be accrued. No keys need to be pressed and no data needs to be entered when in the quickstart manual program.

If all or part of the user mode (age, weight, time) is desired, then use the following instructions:
A. If not in the manual program, select "manual" program by pressing the manual program key until the manual course LED is lighted. Press enter to accept this program.
B. Adjust user data as desired and press enter after each adjustment.
C. Press start or begin pedaling when ready to start. The timer will count down and beep when the program time reaches zero. Also, the program will repeat as necessary if the user wishes to continue his or her workout.

Manual Program - Custom Hill Profile

1. Select "manual" program by pressing the manual program key until the custom course LED is lighted. Press enter to accept the custom course.

2. Adjust the resistance of the segments using the load keys. After the desired resistance is achieved, press enter to accept it. When all 16 segments have been adjusted and entered (accepted), the program will automatically move to the other user data modes.

3. Adjust user data as desired and press enter after each adjustment. NOTE: A level of difficulty must be chosen for the custom hill workout based on the chart given at right:

L	E	V	E	L
WEIGHT	BEGINNER	INTERMEDIATE	EXPERT	
115lbs	7	8	9	
135lbs	6	7	8	
155lbs	5	6	7	
175lbs	4	5	6	
195lbs	3	4	5	
215lbs	2	3	4	
235lbs	1	2	3	

Locate your weight and desired level of difficulty (beginner, advanced, expert) and the chart will indicate the correct level.

4. Press start or begin stepping when ready to start. The timer will count down and beep when the program time reaches zero. The program will repeat as necessary if the user wishes to continue his or her workout.

Hill Profile Program - All Courses

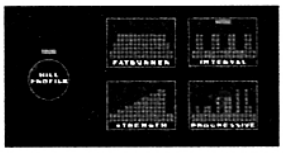

1. Select "hill profile" program of choice by pressing the hill profile program key until the desired course LED is lighted. Press enter to accept this course.

2. Adjust user data as desired and press enter after each adjustment. NOTE: A level of difficulty must be chosen for the hill profile workout based on the chart given at right:

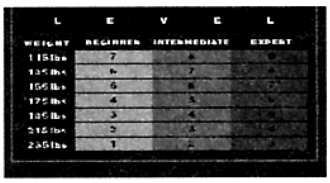

WEIGHT	BEGINNER	INTERMEDIATE	EXPERT
115lbs	7	8	9
135lbs	6	7	8
155lbs	5	6	7
175lbs	4	5	6
195lbs	3	4	5
215lbs	2	3	4
235lbs	1	2	3

Locate your weight and desired level of difficulty (beginner, advanced, expert) and the chart will indicate the correct level.

3. Press start or begin stepping when ready to start. The timer will count down and beep when the program time reaches zero. The program will repeat as necessary if the user wishes to continue his or her workout.

Heart Rate Programs - 60% Fatburner and 85% Aerobic Trainer

1. Heart rate monitoring is mandatory with all Heart Rate programs. Make sure the Polar™ heart rate belt is securely fastened around the chest.

2. Select "heart rate" program of choice by pressing the heart rate program key until the desired course LED is lighted. Press enter to accept this course.

3. Adjust user data as desired and press enter after each adjustment.

4. Press start to begin the program.

Heart Rate Programs - Target Training

1. Heart rate monitoring is mandatory with all Heart Rate programs. Make sure the Polar™ heart rate belt is securely fastened around the chest.

2. Select "heart rate" program of choice by pressing the heart rate program key until the desired course LED is lighted. Press enter to accept this course.

3. Adjust the user data (target heart rate and time) and press enter after each adjustment.

4. Press start to begin the program.

NOTE: When using any of the above heart rate programs the system will automatically shut down if your heart rate exceeds the target by 25%.

Heart Rate Programs - Fitness Test

1.Heart rate monitoring is mandatory with all Heart Rate programs. Make sure the Polar™ heart rate belt is securely fastened to the chest.
2.Select "Heart Rate" program of choice by pressing the heart rate program key until the desired course LED is lighted. Press enter to accept this course.
3.Adjust user data (age/weight) and press enter after each adjustment.
4.Press start to begin the program. Maintain a 30 SPM cadence during the test.
5.The Fitness Test will end after 3 minutes. Stop exercising but remain on the 1000ES. wait 15 seconds while your heart is being monitored. A fitness score will appear between 1 and 10, with 10 indicating the highest level of fitness.

WEIGHT	BEGINNER	INTERMEDIATE	EXPERT
115lbs	7	8	9
135lbs	6	7	8
155lbs	5	6	7
175lbs	4	5	6
195lbs	3	4	5
215lbs	2	3	4
235lbs	1	2	3

• Why Should I Exercise?

The physically fit person performs better, participates more fully in life, and lives longer. When exercise becomes habitual, the risk of heart disease is probably reduced. There is even recent evidence that exercise may help to reduce the risk of cancer. In addition to the physical effects of exercise, there are also psychological benefits from exercising which often include a decrease in stress or tension and improved outlook on life.

Still, exercise is not the only component to a totally healthy lifestyle. You need to monitor your blood pressure, cholesterol, body weight, muscular strength, nutritional habits, and other lifestyle habits to ensure a total fitness program.

Begin your exercise program now. Your work capacity will increase, you will feel less tired at the end of the day, and you will find a new spring in your step. Those who do not participate in a regular exercise program can never understand comments like, "I have twice as much energy as I had before." Use this manual and your Diamondback 1000 series HRT equipment to help you lead a more healthful life and develop a comprehensive fitness program.

• What Is a Good Exercise Session?

Only when your lungs, muscles and heart are continually strengthened, can an exercise program maintain and improve the quality and capacity of the cardiovascular system and your work capacity in general. The American College of Sports Medicine makes the following recommendations for the quantity and quality of training for developing and maintaining cardiorespiratory fitness in healthy adults:

1. An activity that uses large muscle groups, maintained continuously, and is rhythmical and aerobic in nature.
2. Duration of training should be 20 to 60 minutes of continuous aerobic activity.
3. Exercise should be regular, three to five days a week.
4. Intensity of training should raise the heart rate to 60 to 85 percent of maximum heart rate reserve.
5. In addition to aerobic exercise, you need to add strength training of moderate intensity twice a week to your program.

Anyone over the age of 35, as well as younger people who are overweight, should check with his/her physician before beginning any type of exercise program. People who have diabetes or high blood pressure, a family history of heart disease, high cholesterol or have lead a sedentary lifestyle, should protect themselves with a medical checkup and a stress test, preferably administered during exercise.

This is not to say that exercise is dangerous. On the contrary, the cardiorespiratory system thrives on regular exercise. The purpose of the exam is to pick-up any hidden problems. Then your physician and you can develop an exercise program tailored to your level of health and conditioning.

Medical research has shown us that there is an amount of exercise which is enough to condition the cardiorespiratory system and the muscles of the body. That is, there is a target zone in which there is enough exercise to achieve fitness, but not an excessive amount to cause injury. Your heart rate is an excellent indicator of the amount of stress placed on the cardiovascular system. Taking full advantage of this information, the 1000 series HRT equipment allows your exercise to be heart rate controlled.

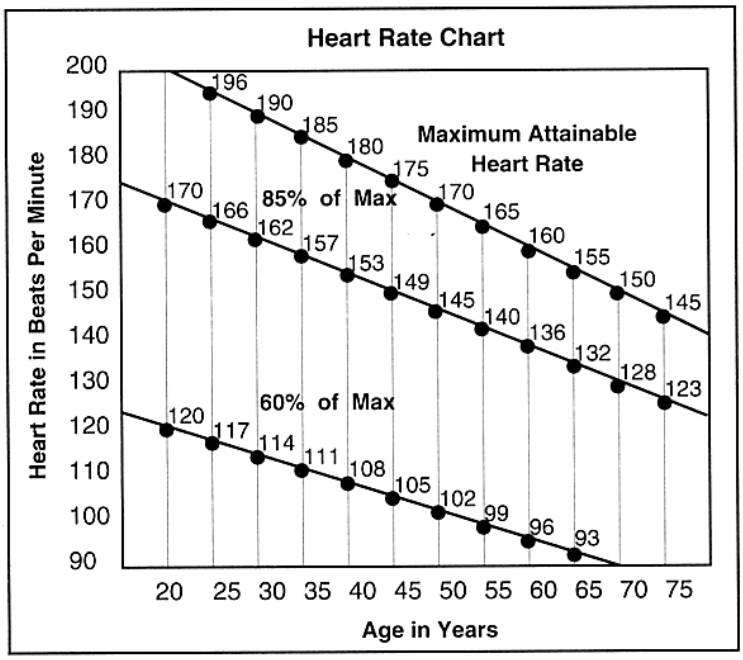

If exercise intensity is too low or too high, no gains will be made in fitness. If the intensity is too low, the stress levels are ineffective. If the intensity is too high, injury or fatigue may set your exercise program back as you try to recover.

The best way to monitor exercise intensity is to accurately count your pulse during exercise. Your heart rate can easily be determined by counting your pulse at the chest, wrist or at the carotid artery on your neck. It is difficult to count your own pulse during exercise, mainly because you cannot count fast enough to get an accurate number. Your 1000 series HRT is equipped with a photo-reflectance earlobe sensor or wireless ECG telemetry. What they do is automatically count your heart rate while you are actually exercising. Heart rate is either monitored or controlled, recorded and electronically displayed as a digital readout. Your target heart rate, the intensity needed to improve cardiovascular fitness, depends primarily on your age and not your state of fitness. During your training sessions, your heart rate should be between 60 and 85 percent of your maximum heart rate. It is calculated as a percentage of your maximum heart rate, estimated as 220 minus your age. For example if you are 40 years of age, your maximum heart rate is 220 - 40 =180 beats per minute. Your 60 percent intensity level is calculated as 180 x .60 =108 beats per minute. Your upper target heart rate limit is 180 x .85 =153. This means that if you are 40 years of age, the exercise you perform should be at least 108 beats per minute and not greater than 153 beats per minute.

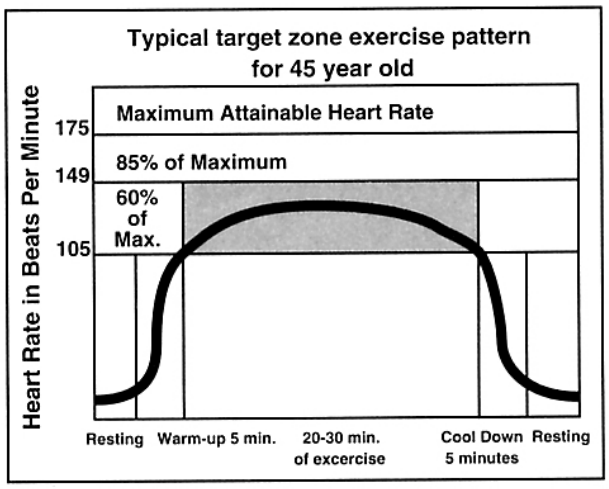

HEART RATE EXERCISE

The 1000 series HRT guides your exercise program by electronically monitoring or controlling your heart rate and computing your exercise heart rate. The computer calculates your target pulse rate based upon the age entered. This information sets the resistance of exercise at 60%, 85% or at your personal preset target pulse rate. (See heart rate table.)

However, these limits can be varied manually by you to accommodate your individual needs. Those just beginning an exercise program, for example, may want to use lower limits as recommended by their physician.

Heart rate is the key to medically and scientifically designing a proper exercise training session. If your heart rate is below the lower end of the target pulse zone, the heart is not sufficiently stimulated to get a good workout. However, if you exceed the upper limits, you are over exerting yourself.

Work Output : The 1000 series HRT equipment sets resistance by the use of variable magnetic fields. Do not let the term "watts" be intimidating to you. Quite simply, "watts" is the level of resistance created by the magnetic fields. The key in the manual mode is to set the watts (workload) at a level that will elevate your heart rate or at the desired resistance to accomplish your training goal. In the other exercise modes, the resistance will be set to the course profiles, target heart rate or percent of maximum heart rate.

CHOOSING YOUR COMPUTERIZED EXERCISE PROGRAM

The 1000 series HRT equipment offers you numerous scientifically and medically designed exercise modes:

- -Unlimited hill course profiles, each with 9 levels of difficulty
- -Three heart rate control modes
- -Manual variable resistance
- -Fitness test mode

The Hill Course Profile Programs (Heart Rate Monitor)

The 1000 series HRT equipment simulates either riding a bicycle or going up steps. It simulates hill profiles with light resistance at the lower levels of difficulty for beginning exercisers and simulates resistance for the highly trained individual at the higher levels of difficulty. The resistance changes smoothly and automatically. The 1000U and 1000R computer console shows you a hill profile that tells you if you are riding uphill or downhill. All the hill course profiles are made up of three basic time periods:

1) Warm-up: Gradually allows your body to ease into the exercise session.

2) Exercise period: Challenges your cardiovascular system. You control the workout session from 1 to 99 minutes, or you may automatically repeat shorter sessions.

3) Cool-down: Allows your body to return gradually to its pre-exercise state (21/2 minutes in duration).
The warm-up and cool-down periods are less effective with programmed exercise time of less than 10 minutes.

60 or 85 Percent Heart Rate (Heart Rate Control)

The workload is automatically adjusted so that a prescribed target heart rate of 60 or 85 percent of maximum can be maintained throughout the exercise session. Simply press 60% or 85%, input your desired time of exercise and your age and the 1000 series HRT takes over and sets your workload to maintain your heart rate (generally plus or minus 5 beats) of your calculated percentage max heart rate. Your heart rate is constantly monitored and it controls the workload. On the 1000U and 1000R bicycles, workload is independent of pedal speed.

Target Heart Rate Exercise Mode (Heart Rate Control)

In this mode, the workload is controlled by your preset heart rate. Simply enter your desired training time and heart rate and the 1000 series HRT does the rest. When used with the POLAR™ wireless telemetry system or earlobe sensor, accurate heart rate data is fed into the on-board computer where heart rate is continually compared to the predetermined target heart rate. The computer adjusts the workload up or down to maintain the target heart rate you desire. On the 1000U and 1000R bicycles, workload is independent of pedal speed.

Manual Workout Mode (Heart Rate Monitor)

In this load program, the computer maintains a selected workload (Wattage) at a certain pedal RPM/SPM throughout the preselected time of your exercise session. The workload can be adjusted up or down anytime during the training session. Your heart rate will be monitored, but it does not control the workload. On the 1000U and 1000R bicycles, workload is dependent on pedal speed.

WEIGHT CONTROL

Regular physical exercise also benefits weight control. Modern society and conveniences have reduced our daily energy output compared to that expended by many individuals 50 years ago. Yet, the total amount of calories eaten by most of us has remained the same or has increased. If you take in more calories than you use every day — you gain weight. To reduce weight you can take in fewer calories by dieting, or increase the amount you use by working harder or exercising.

Every day you may want to keep a record of your caloric intake and output. For example the excess of just 100 calories per day can cause a weight gain of about 10 pounds in one year. A combination of moderate diet and exercise will allow you to stay in caloric balance. Exercise and dieting is much healthier for you than just dieting.

When you exercise, you lose fat, gain some muscle mass and look better. With just dieting, you will feel tired. With exercise, you feel better and generally become more active.

With exercise, you can balance your caloric intake with your caloric output. The 1000 series HRT equipment makes it easier to determine how many calories you are using during exercise. For example, a pound of fat is equal to 3,500 calories. If you want to lose 1,000 calories per week with exercise (about 140 calories per day), just 20 minutes of moderate exercise each day will help you reach your goal.

TIPS ON STAYING WITH IT

Do not expect fitness to come overnight. The first few weeks of your exercise program will be the toughest, but in time you will feel healthier, stronger and you'll be losing weight. The following tips are some of those used by many people to help them adhere to their exercise program.

Make exercise a part of your everyday activity. Some individuals find that if they exercise at the same time every day, they adhere better to their exercise program. Others fit exercise into their daily schedule to help them relax from work or to break up the day.

You may want to set a monthly calorie goal for yourself. You can set a goal of so many thousand calories and if you reach your goal give yourself a reward such as going out to dinner or buying some new clothes.

Another way to have fun while exercising is to read, watch television or view your favorite videos. It is an excellent time to catch up on your magazine subscriptions or watch the morning news. The type of music you listen to while exercising can help reduce stress.

Lastly, keep a daily log. A training diary will help you monitor your progress objectively. Besides your training information, you can record information on body weight, how you feel and other activity or exercise you incorporate into your exercise program.

Finally, remember that self-discipline will have to be the base of your exercise program. There may be those days when you feel too busy to exercise. Recognize that those days will come, and keep in mind that regular exercise is an important part of your lifestyle.

1000 SERIES MAINTENANCE SUGGESTIONS

1. Always inspect hardware prior to any exercise session. Look for loose hardware, loose pedals, loose cranks, and frayed wires. repair or replace any damaged or worn parts, tighten all loose hardware.

2. After training, always wipe down your 1000 series equipment. Perspiration that continuously settles on frame, pads or casings may eventually cause rust or damage to your 1000 series unit. Damage resulting from lack of maintenance will not be covered under warranty. To clean pads, use a mild soap and warm water. Dry with clean towel.

3. If noises develop or malfunctions occur, you should contact your authorized Diamondback fitness dealer.

Stop. Can you feel your heart beating? If you are at rest, sitting still, you probably can't. But, once you begin to exercise, your heart will soon remind you of its presence. The demands of increased physical activity require that you pay special attention to the workings of this wonderfully simple, yet vital muscle. It is your key to good health and total fitness.

Your heart is a hollow, muscular organ that pumps a continuous flow of blood throughout the circulatory system. A very demanding organ, it beats an average of 100,000 times a day, at 70 beats per minute, pumping 180 gallons of blood every hour. Over a lifetime, a heart beats 3 billion times and pumps an incredible 100 million gallons of blood, enough volume to fill the Grand Canyon to its rim. Yet, this mightiest of all muscles, the one that sustains our life, is no bigger than a man's fist and weighs less than a pound.

Why is all this important? Because blood supplies the body's trillions of cells with oxygen, nutrients and other important chemicals necessary for life. Your heart works continuously to keep this precious blood flowing throughout your body, also picking up waste products from body cells to be eliminated through the kidneys and the lungs.

Your heart, located in the middle of your chest, lies beneath the breastbone and just slightly to the left of center. Inside, there are four rooms, or chambers. The two upper chambers, called atria, are for collecting blood. The two lower chambers, called ventricles, are for pumping blood. A muscle wall divides them into left and right sides.

On each side of the heart, blood flows from the upper to the lower chamber with little valves acting as one-way doors between them. These doors regulate the flow of blood through the heart in one direction, then close again to keep the blood from flowing back.

Specifically, the right side of the heart receives "used" blood returning from the tissues in the body. This blood is oxygen-depleted and loaded with carbon dioxide and other waste products. Blood enters the right atrium and is delivered to the right ventricle. The right ventricle pumps the blood out of the heart and into the lungs to eliminate (exhale) carbon dioxide and to pick up (inhale) fresh oxygen.

The oxygen-rich or "reconditioned" blood from the lungs then travels to the left side of the heart. It enters the left atrium and is passed to the left ventricle where it is pumped out to the blood vessels for another journey through the circulatory system. A single drop of blood makes this round trip through the heart every 73 seconds, 1,185 times a day.

The pumping action of the heart is controlled by the body's natural pacemaker called the S-A node, located in the wall of the right atrium. This specialized bundle of fibers generates an electrical wave which spreads throughout both atria, causing them to contract. The wave triggers the A-V node which then sends impulses to the ventricles causing them to contract.

Like clockwork, the heart repeats this coordinated pumping cycle of receiving and distributing blood about 70 times per minute. The rhythmic expansions of your arteries as the blood rushes through them correspond to the beats of your heart. These expansions are measured as your pulse or heart rate. Your heart rate reflects precisely how your cardiovascular ("cardio" - heart and "vascular" - blood vessel) system is functioning and how hard it is working.

Your cardiovascular system reaps many benefits from exercise, all related to efficiency at pumping blood and delivering oxygen. Increased aerobic capacity is the most notable of these payoffs. This means greater efficiency extracting oxygen from air required for active muscles. Your heart muscle becomes more powerful, boosting cardiac output by as much as 20%. Because the heart becomes more efficient and resistance to blood flow is reduced, resting heart rate and blood pressure decreases. In addition, the small capillaries feeding the muscles multiply and the overall blood volume elevates, all of which means greater oxygen transport and waste-removal.

Taking care of your heart pays big dividends. Combined with a well-balanced diet and monitoring of blood pressure, cholesterol, body weight and lifestyle…exercise is the single most effective way to keep your heart strong and healthy…for a lifetime.

EXERCISE DIARY

Name _____

Maximum Heart Rate _____ H.R. at 60% _____ H.R. at 85% _____

	Session Rest H.R.	Body Weight	Program Selection/ Level	Exercise Time	Comments
1					
2					
3					
4					
5					
6					
7					
8					
9					
10					
11					
12					
13					
14					
15					

REFERENCES:

Exercise Bike Workouts. Charles T. Kuntzleman. Contemporary Books, Chicago, IL, 1985.

Indoor Cycling. John Krausz & Vera der Reis Krausz. Doubleday & Company, Garden City, NY 1987

The Indoor Bicycling Fitness Program. Jane Peters. McGraw-Hill, New York, NY, 1985

The Recommended Quantity and Quality of Exercise for Developing and Maintaining Cardiorespiratory and Muscular Fitness in Healthy Adults. The American College of Sports Medicine, Indianapolis, IN, 1990.

DIAMONDBACK FITNESS HRT 1000 SERIES WARRANTY INFORMATION

Commercial Warranty Guidelines for Light Institutional Application

The Diamondback 1000 series line of training systems feature a commercial warranty which applies to light institutional and home use application. Superior construction of frame, casings and mechanical & electronic components make Diamondback one of the most durably built and cost effective training systems which makes the line ideally suited for many applications including hotel/motel facilities, police/fire stations, medical/physical therapy offices and corporate fitness centers. Durable and simple to use, this line is perfect for budget minded and space restricted facilities:

Covered Products: Diamondback HRT 1000ES Electronic Stepper
Diamondback HRT 1000R Recumbent
Diamondback HRT 1000U Upright

Usage: 6 hours/day, 7 days/week, 52 weeks/year

Recommended Applications: Hotel/Motel/Lodging Facilities
Apartment/Condo Complexes
Churches/Religious Fellowship Centers
Police/Fire Stations
Parks & Recreation Centers
Medical & Rehab Facilities/Martial Arts & Self Defense Studios

Excluded Facilities: Prisons, Military Training Centers, Health Clubs, School Gymnasiums

Warranty Coverage:

•Lifetime limited warranty on frame, covers defects in welds, materials & workmanship

•2 years limited warranty on parts/electronics cables, wires, timers, motors, console/computer, chains, freewheels, bushings, bearings, misc. electronics, components, side cases

•1 year limited warranty on Polar™ heart rate system (belt & transmitter) against defects & workmanship through Polar™ manufacturing

•90 day limited labor on wear items: earclips, sensor cords, pedal straps, pedals, cranks, upholstery, pads, handlebars/handrail grips, AC adapter, exposed painted surfaces, rubber caps, levelers, rollers, assorted adjustment pins.

•Labor by Diamondback or authorized center at Diamondback's discretion.